BODY, REAR CLOSEOFF - Z26S4D92AN/AH/BN/BH (C750460)

2026 RZR - RZR PRO S4 ULTIMATE (R01) - Z26S4D92AN/AH/BN/BH

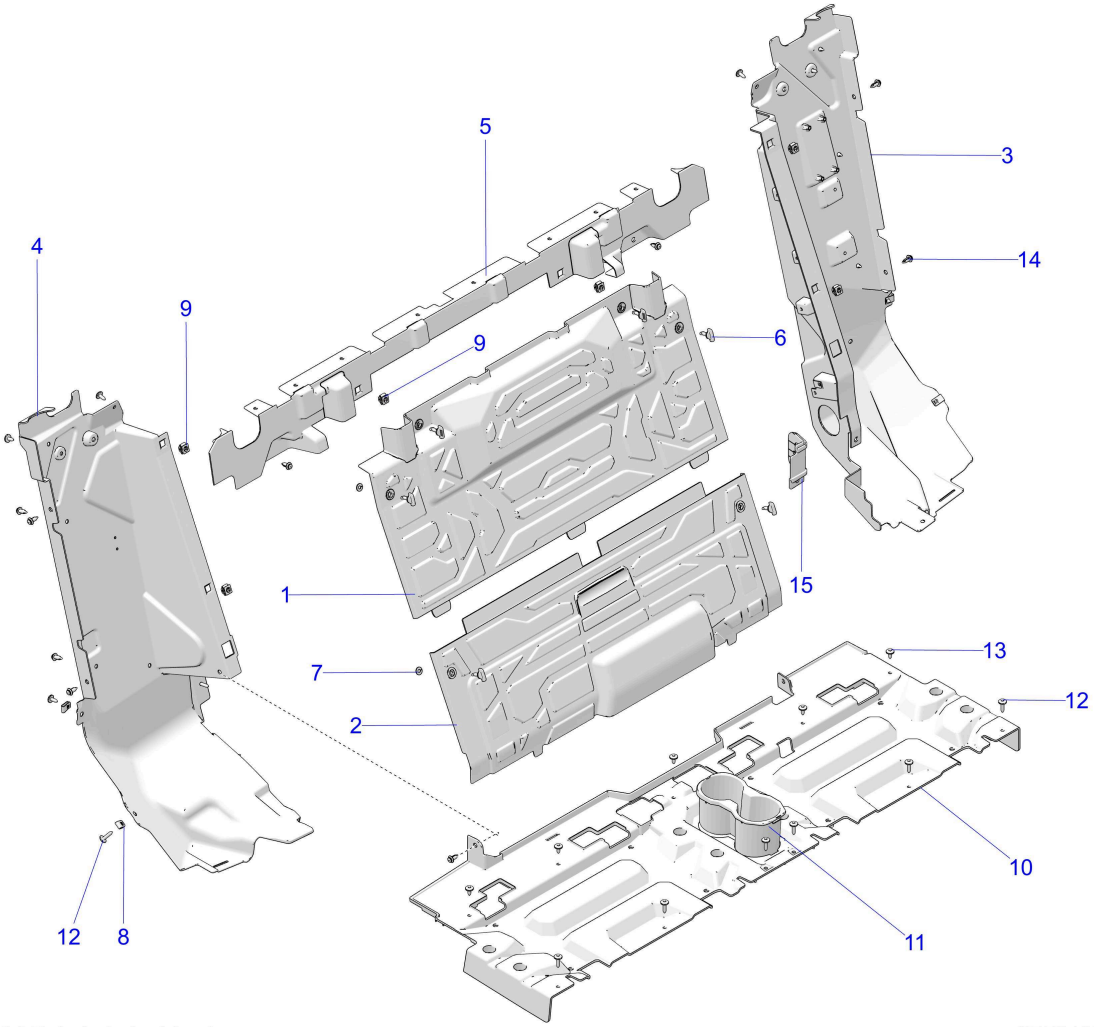

© 2024 Polaris Industries Inc. C750460

Reference #	*Part#*	*Description*	*Quantity*
1	2637415-070	ASM-PANEL,CLOSEOFF,RR,TOP,BLK [INCL. QTY 4 OF 6 &7]	1
2	2637496-070	ASM-PANEL-CLOSEOFF,RR,BTM,BLK [INCL. QTY 4 OF 6 &7]	
3	2637416-070	ASM-PANEL,CLOSEOFF,REAR,LH,BLK [INCL. QTY 4 OF 8 & QTY 2 OF 9]	1
4	2637417-070	ASM-PANEL,CLOSEOFF,REAR,RH,BLK [INCL. QTY 2 OF 8 & 9]	1
5	5456332-070	PANEL-CLOSEOFF,COVER,BLK	1
6	7662384	STUD-1/4 TURN,NYLON	6
7	7710919	CLIP-RETAINER,1/4 TURN	8
8	7547674	NUT-M6-1.0, U-TYPE (2.5-3.8)	8
9	7710933	CLIP-1/4 TURN	4
10	5455712-070	PANEL-UNDERSEAT,REAR,BLK	1
11	5455779	HOLDER-CUP	1
12	7519650	SCR-TXTH-M6X1.0X25 ZFB	AR
13	7518936	SCR-M6X1X16 TR/TX-M	AR
14	7661855	RIVET-TUFLOK,.315-.325X.787	AR
15	5417170	GROMMET-EVAP	1

Copyright 1996-2026 Polaris Industries U.S.A All rights reserved.